MPR-6ZHMAUT Home Audio Distribution System

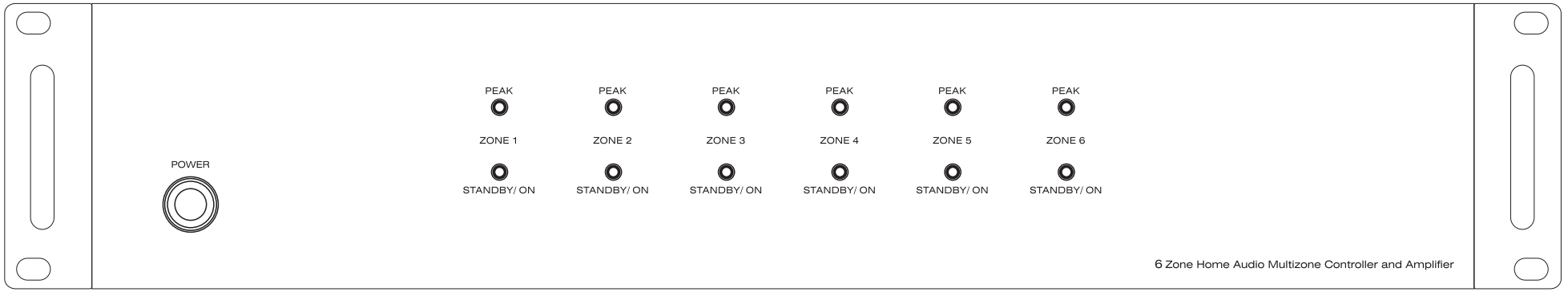

Multizone Controller

Professional Multi-Room / Source Audio System

User and Installation Manual

WARNING! TO REDUCE THE RISK OF FIRE OR ELECTRIC SHOCK, DO NOT EXPOSE THIS APPLIANCE TO RAIN OR MOISTURE.

CAUTION! TO REDUCE THE RISK OF SHOCK, DO NOT REMOVE THE COVER, NO USER SERVICABLE PARTS INSIDE. REFER SERVICE TO A QUALIFIED SERVICE TECHNICIAN.

SAFETY WARNINGS

To avoid personal injury or damage to the equipment, please adhere to the following safety guidelines:

1. Do not expose this device to water or moisture of any kind. Do not place objects filled with liquids on or near this device.
2. Do not install this device in an enclosed space. Ensure that there is sufficient ventilation to keep the unit from overheating.
3. Do not place objects on this device or otherwise block the cooling vents.
4. Do not install near any heat sources, such as stoves, radiators, or fireplaces.
5. Do not place naked flames, such as candles, on or near this device.
6. Clean only with a dry cloth. Do not use liquid cleaners or solvents to clean this device.
7. Unplug the unit during lightning storms or when the unit will be unused for a long period of time.
8. Do not allow the power cords to be walked on, pinched, tripped over, or otherwise damaged.
9. Do not attempt to defeat the grounded AC power plug by using a "cheater" plug adapter or modifying the power cable. If the grounded plug will not fit in your AC power outlet, please contact a professional electrician to replace the obsolete outlet.
10. Ensure that any cables that are run through the walls or between floors are properly rated for "in-wall" or "riser" use. Use of unrated cables could contribute to the rapid spread of any fire and could invalidate insurance claims.

INTRODUCTION

Thank you for purchasing the MPR-6ZHMAUT Home Audio Distribution System!
The MPR-6ZHMAUT is a full function audio system, which combines the functions of a preamplifier, a full 6x6 audio matrix, and six 50 watt power amplifiers for driving speakers in up to six separate zones. Additionally, up to three units can be combined to provide full signal switching and amplification to up to 18 different speaker zones! For best results, please read and understand this manual thoroughly before installation, paying particular attention to the safety warnings and guidelines. Keep this manual in a safe place for future reference.

PACKAGE CONTENTS

After receiving the product, please inventory the contents to ensure you have all the proper parts, as listed below. If anything is missing or damaged, please contact Customer Service for a replacement.
1x MPR-6ZHMAUT master controller/amplifier
6x Keypad controllers
1x Keypad in-wall hub connection plate
1x Infrared remote control
1x Expansion ribbon cable
1x Rack mounting kit
1x AC power cord (IEC 60320 C13 to NEMA 5-15)
1x User's manual

Multizone Controller MASTER CONTROLLER/AMPLIFIER FRONT PANEL

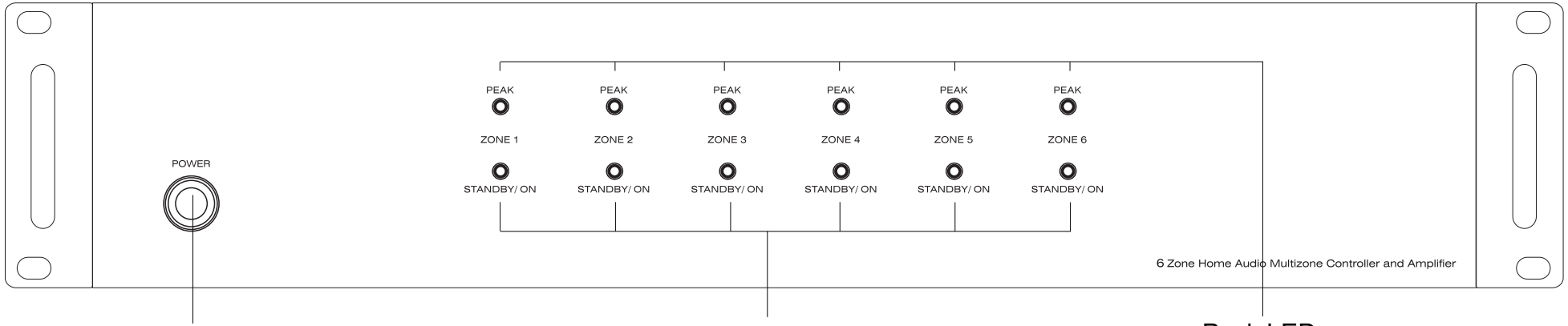

Power On/Off/ Standby

Depress the power switch to power the unit ON. Press it again to release the latch and power the unit OFF. Note that even the Master Controller is powered on, each zone will remain in Standby until the zone keypad is activated.

Standby/Zone ON LED

These six LEDs illuminate to indicate the status of each zone. The LED will glow Blue when in Standby and will glow White when activated.

Peak LED

These six LEDs illuminate to indicate when the input level of the connected source is too high. It is normal for the LED to flash red once in a while, but if it glows red steadily or is glowing red most of the time, the input level should be reduced.

Stereo line level pre-amp outputs for every zone. Connect powered sub-woofers or high power zone amplifiers or commercial audio amplifiers

Paging capability for Input 1 to broadcast to all zones when 12Vdc is applied to the PA - IN jack

6 x 50 watt stereo amplifiers or 6 x100 watts in bridge mono mode

Six stereo analog inputs

Input 6 with Optical or analog stereo capability

Expandable to 18 zones With 3 x Multizone Controller systems

Complete RS232 control

Dual voltage selector 115V - 230V

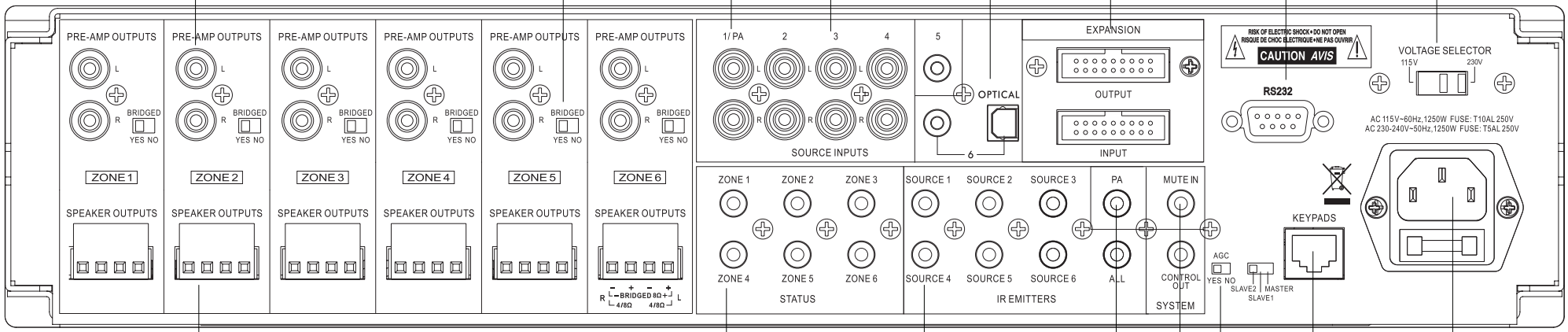

Zone activated 12Vdc triggers x 6

12Vdc input paging trigger

IR Outputs 6 routed & 1 common

Single RJ45 jack connects to the Multizone Controller keypad hub for 6 keypads

AC Input 115-230V

12 high quality amplifiers with 50 watts output power @ 4ohms or 100 watts @ 8ohms in bridge mono mode with removable terminal block connectors

Mute the entire system with the 12Vdc MUTE IN. Use the12Vdc master output to trigger source equipment or home theatre equipment

Automatic gain control protects against amp overload

The Multizone Controller keypads are available in white. The Multizone Controller keypad is designed to be very easy to use. Five backlit buttons access zone power on/off, volume up/down, selection of sources 1-6, zone treble, zone bass, zone unmute and zone standby. The backlit LED display provides visual feedback of levels and source numbers. The Multizone Controller keypad also provides an Infrared receiver which allows complete zone control via the included Multizone Controller-RC hand held remote control. The Multizone Controller IR system also sends IR commands to the Multizone Controller master controller IR output jacks for remote control of your source components. No programming necessary, just touch the keypad and start playing music instantly!

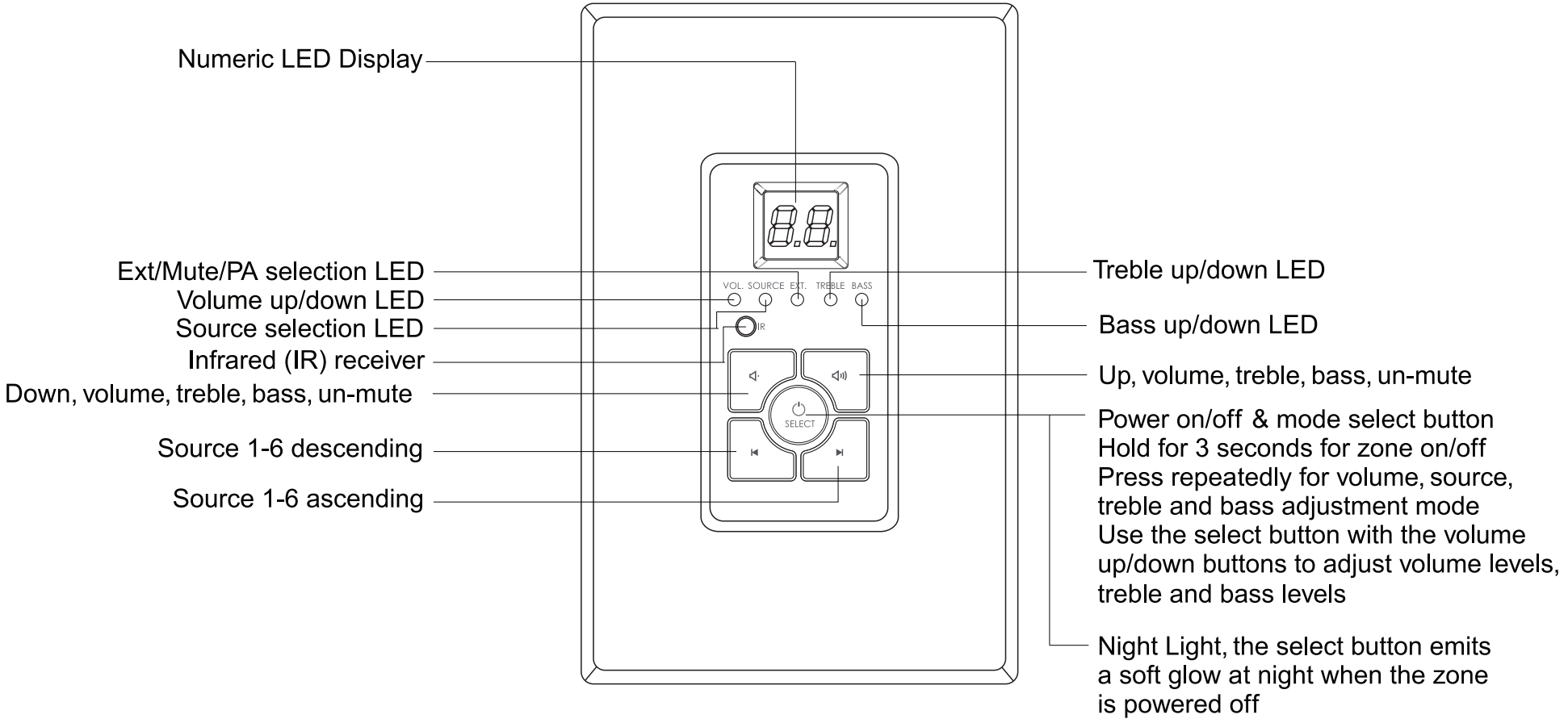

The Multizone Controller-RC Infrared remote control provides complete zone control through the (IR) receiver located in the center of the Multizone Controller keypad. All keypad functions can be accessed with the Multizone Controller-RC. In addition to this the Multizone Controller-RC provides a handy MUTE button to temporarily mute audio in the zone and left/right balance adjustment. Once the MUTE function is activated the keypad numeric LED display will flash indicating the mute status. Press the MUTE button again to return to playing music. Pressing the volume up/down buttons on the keypad will also un-mute the zone and return to playing music.

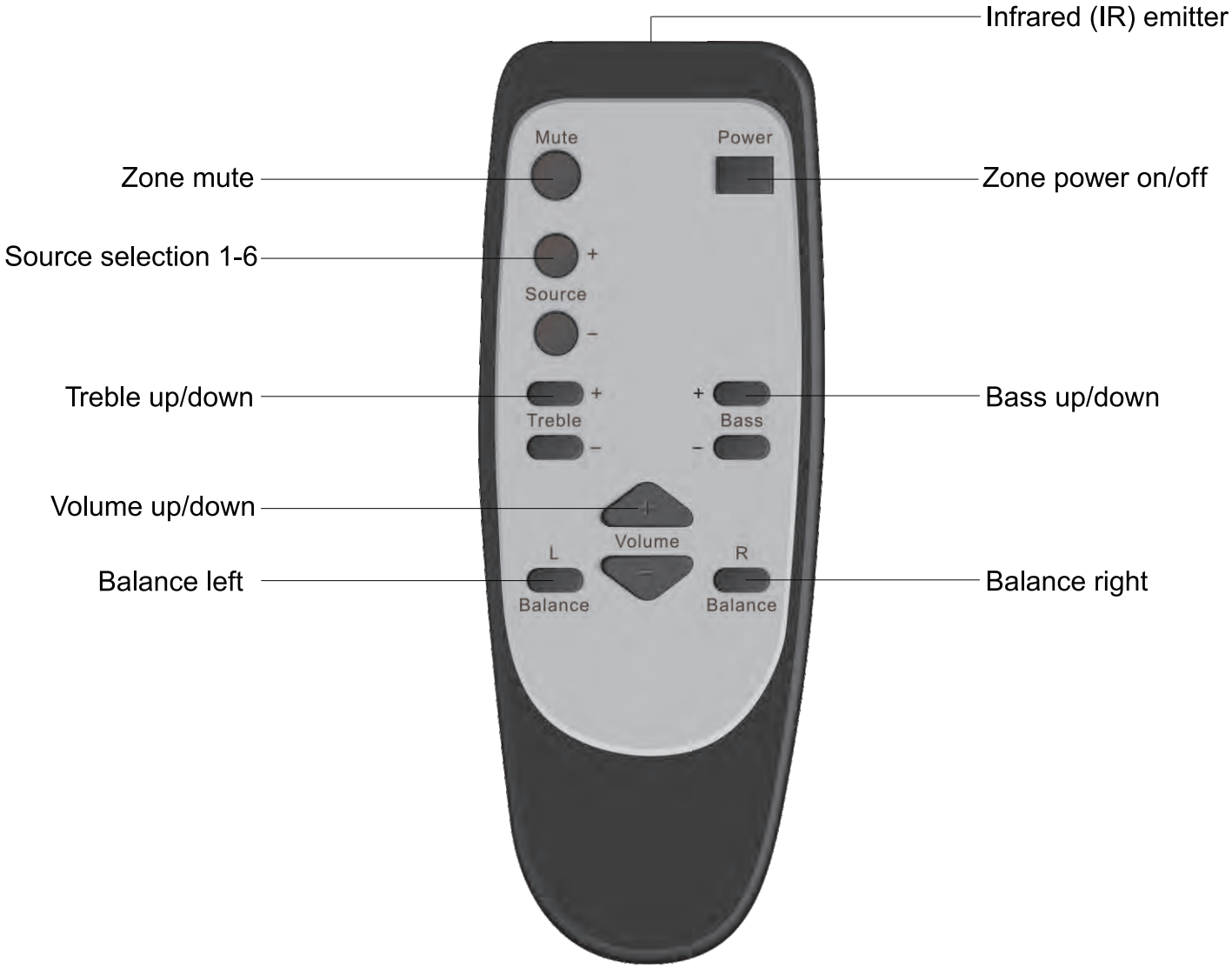

IMPORTANT:

The Multizone Controller should be situated in a well-ventilated location or position. Do not block the vents on the sides or top of the chassis. Proper ventilation is required for normal operation. Do not expose the unit to excessive dust and do not allow dust to build up on the unit and block the vent holes in the chassis. Do not place the Multizone Controller above or below heat-generating components such as another audio amplifier. Be sure to leave at least 2 inches of space to the sides of the chassis with open air flow above and below the unit. Before making any connections, ensure that all equipment is powered off and unplugged to prevent the possibility of personal injury or equipment damage due to electrical shock.

INSTALLATION:

1. The Multizone Controller can be mounted in an equipment rack using the rack kit that is included with the Multizone Controller.
2. Always disconnect the AC power cord before making any connections to the Multizone Controller.
3. Use good quality 12-14awg 2 conductor stranded copper speaker wire for all speaker connections.
4. Use good quality cat5e or cat6 cable and RJ45 connectors for all Multizone Controller-KP (keypads).
5. The Multizone Controller includes a central keypad hub. All Multizone Controller-KP (keypads) will be home run back the hub. Keep the hub close the Multizone Controller.
6. Wire all cat5e/cat6 cables exactly the same using TIA/EIA 568A wiring. Do not use crossover cables.

IMPORTANT: All Multizone Controller-KP keypads must have their mode dip switches set properly before powering the system on.

Set the three DIP switches on each Keypad Controller to one of the six identification patterns listed below. Each Keypad Controller connected to the same Master Controller/Amplifier must have a unique identification. Note that the identification is localized to each Master Controller/Amplifier device. If multiple Master Controllers are in use, each one will have its own set of keypads with the same identification numbers as keypads on another Master Controller.

SETTING THE KEYPAD MODE DIP SWITCHES AND KEYPAD WIRING:

Each Multizone Controller-KP shows a handy mode selection chart on the back of the keypad as follows: Switch in the up position is ON. Switch in the down position is OFF.

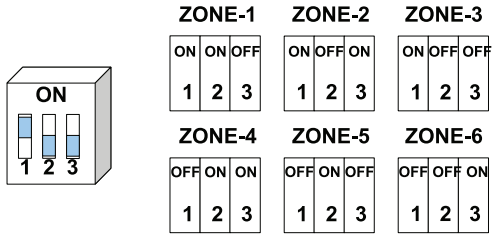

IMPORTANT: Use a screwdriver to install the keypad.
Using a power drill will damage the keypad.

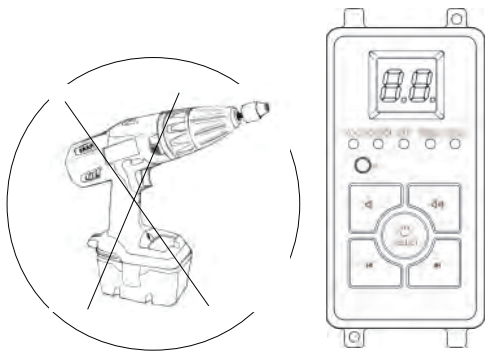

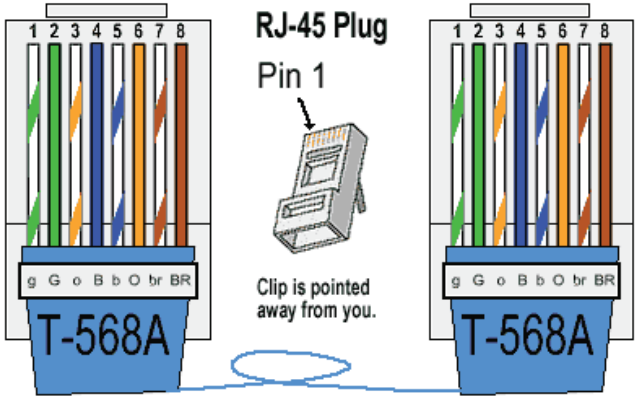

IMPORTANT: The Multizone Controller-KP (keypad) should be mounted in an electrical box or in-wall mud ring using a screwdriver to tighten. Do not use a power drill to tighten the keypad screws. Over tightening will damage the keypad.

INSTALLATION: Connecting the Multizone Controller-KP (keypads)

Use a good quality Cat5e/6 cable and crimp RJ45 jacks on each end of the cables. The RJ45 jack plugs into the back panel of the keypads and the 6 x RJ45 jacks on the back panel of the Multizone Controller-Keypad-Hub. The Multizone Controller-Keypad-Hub is included in your Multizone Controller kit. Plug the RJ45 jacks into any available jack on the Multizone Controller-Keypad-Hub. Zone assignment is determined by the MODE dip switches on the back of the Multizone Controller-KP (keypad).

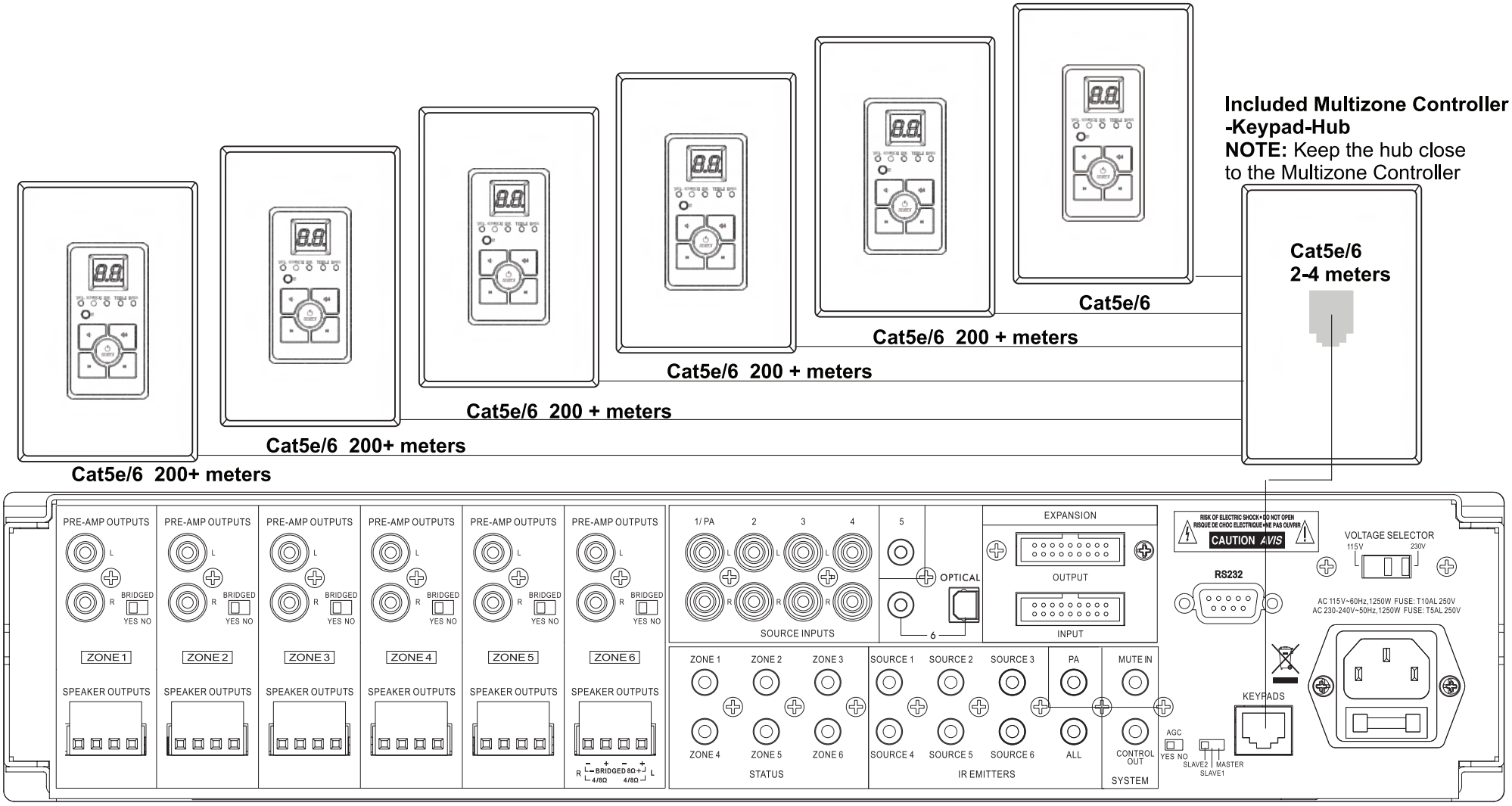

IMPORTANT: The Multizone Controller amplifiers are capable of driving 4-8 ohm speaker loads in stereo mode and 8ohm loads in bridge mono mode. Never connect more than two 8ohm speakers wired in parallel to a single amplifier channel in stereo mode. Never connect more than one 8ohm speaker to a single channel in bridge mono mode. Never connect the Left & Right channels of the amplifier together.
Never combine the – negative channels of the amplifier together. Improper speaker installation can damage the amplifiers and void the warranty. If you are unsure how to connect speakers to the Multizone Controller always contact a qualified technician before connecting speakers to the amplifiers.

INSTALLATION: Connecting 8 ohm speakers to the Multizone Controller in STEREO MODE

Use good quality 12-14awg stranded copper speaker wire. Never run speaker wires parallel to AC wires. If you must cross AC wires always cross at a 90 degree angle. The speaker output terminal block connectors are removable. Remove the terminal block connector and make sure that all connections are open by turning each set screw counter clockwise. This insures that the speaker wire opening is completely open. Trim approx 1/4" of insulation from the speaker wire and twist the copper ends. Insert the speaker wires into the connector and tighten the set screws. Repeat for the remaining zones.

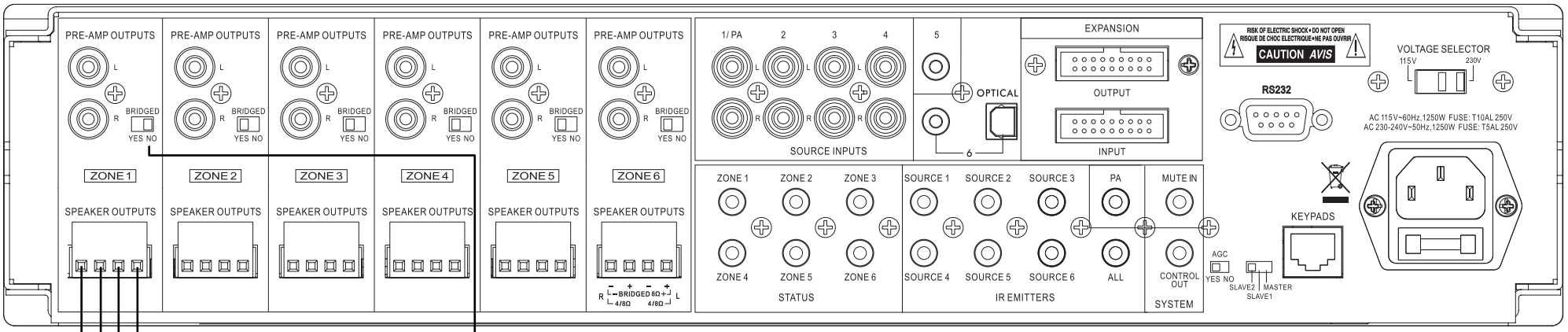

Set the amplifier mode switch to STEREO
Repeat for zones 1-6

NOTE: It is possible to set some amplifier channels to BRIDGE and some to STEREO. Follow the correct wiring techniques and correct speaker impedance for each zone.

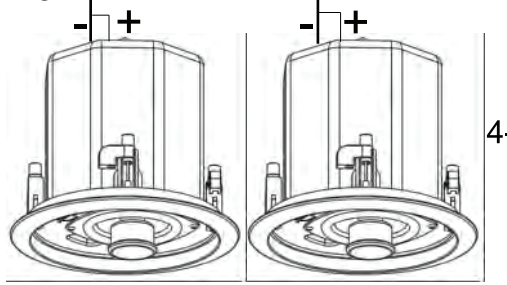

4-8ohm speakers

IMPORTANT: The Multizone Controller amplifiers are capable of driving 8 ohm speaker loads in in bridge mono mode. Never connect more than one 8ohm speaker to a single channel in bridge mono mode. Never combine the – negative channels of the amplifier together. Improper speaker installation can damage the amplifiers and void the warranty. If you are unsure how to connect speakers to the Multizone Controller always contact a qualified technician before connecting speakers to the amplifiers.

INSTALLATION: Connecting 8 ohm speakers to the Multizone Controller in BRIDGE MODE

Setting the amplifier mode switch to BRIDGE mode will double the amplifier power output to 100 watts. Effectively combining the LEFT and RIGHT amplifiers into one larger mono amplifier. The LEFT and RIGHT input signals will be summed to mono. The minimum speaker impedance in bridge mode is 8ohms. Use good quality 12-14awg stranded copper speaker wire. Never run speaker wires parallel to AC wires. If you must cross AC wires always cross at a 90 degree angle. The speaker output terminal block connectors are removable. Remove the terminal block connector and make sure that all connections are open by turning each set screw counter clockwise. This insures that the speaker wire opening is completely open. Trim approx 1/4" of insulation from the speaker wire and twist the copper ends. Insert the speaker wires into the connector and tighten the set screws. Repeat for the remaining zones.

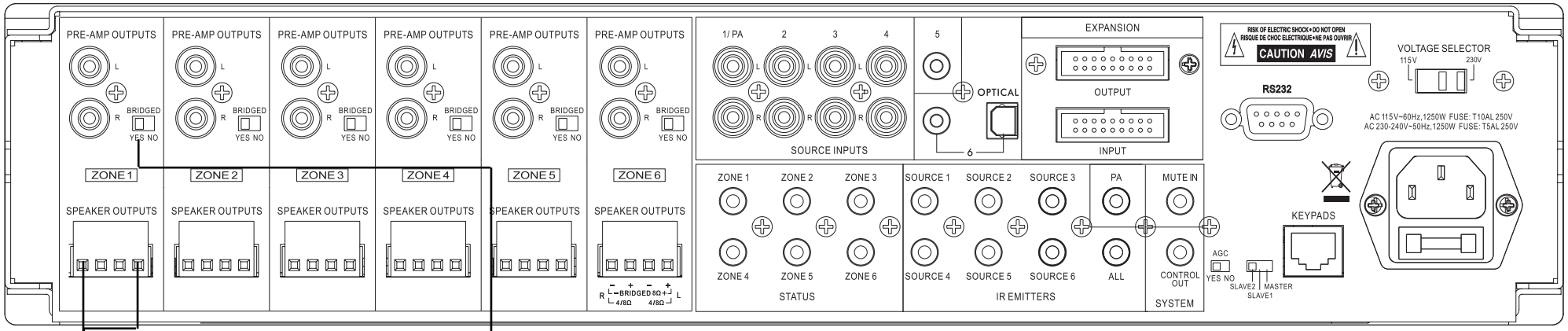

Set the amplifier mode switch to BRIDGE
Repeat for zones 1-6
NOTE: It is possible to set some amplifier channels to BRIDGE and some to STEREO. Follow the correct wiring techniques and correct speaker impedance for each zone.

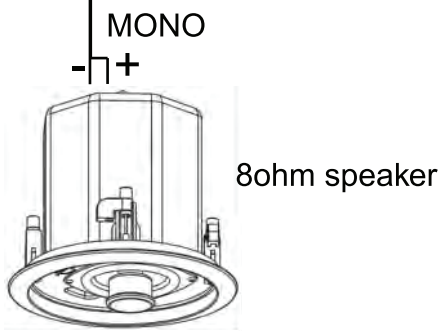

INSTALLATION: Using The Multizone Controller PRE-AMP OUTPUTS

The Multizone Controller provides 6 x stereo unbalanced line level PRE-AMP outputs which correspond to the 6 x zone outputs. PRE-AMP outputs can be used to connect powered subwoofers to a zone or additional amplifiers to expand the available power in a large zone or multiple zones.

The Multizone Controller can also be used as the master controller in large commercial audio systems where constant voltage 25/70V amplifiers can be connected to the PRE-AMP outputs. The PRE-AMP output levels are variable and can be controlled from the Multizone Controller-KP keypad, infrared or RS232. Keep the PRE-AMP output cable runs under 25 feet to avoid RF interference and use good quality shielded RCA cables.

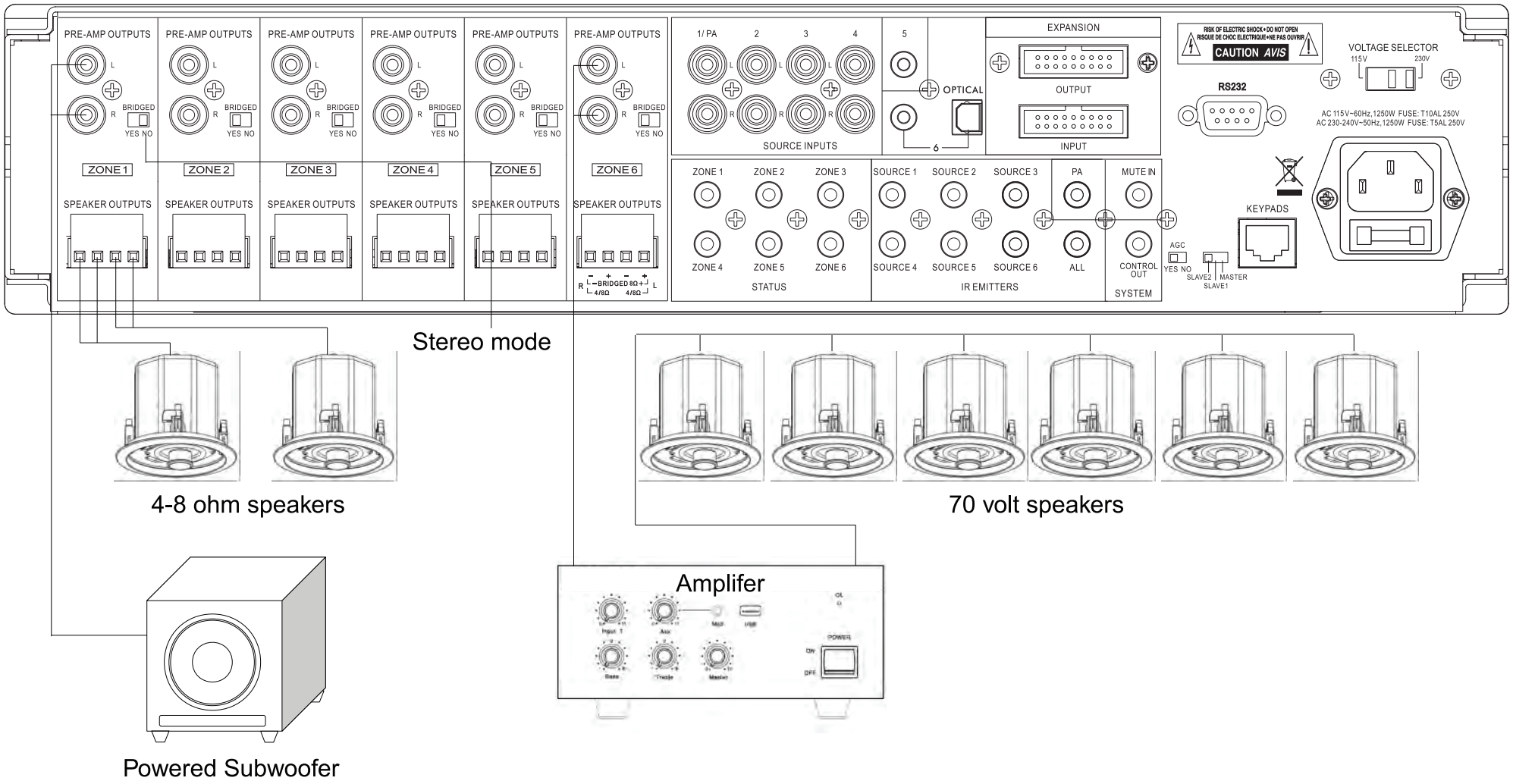

INSTALLATION: Connecting Sources to the Multizone Controller

The Multizone Controller provides 6 x stereo unbalanced line level source inputs which can be accessed by any zone. Input 1 can be used as a paging (all zones) input or a party mode (all zones) input. When a source is connected to input 1 and 12VDC is applied to the PA-IN jack (3.5mm tip+ sleeve -), source 1 will be broadcast in all zones. If there is no DC voltage applied to the PA-IN jack then source 1 will act like all the other 5 sources and broadcast only when a zone selects source 1. Always use good quality shielded RCA cables to connect sources to the Multizone Controller and keep RCA cables as short as possible to avoid RF interference.

Infrared Emitter Outputs:

This system has the ability to repeat IR signals from each speaker zone to control the source devices. To carry the IR signal from the Master Controller/Amplifier to the actual source device requires the use of IR emitters (not included). The IR emitters connect to the Master Controller via a 3.5mm TS plug. If the emitters are not long enough, you can use standard 3.5mm TS or TRS extension cables to increase their lengths. The IR repeater function supports single-band IR signals (those in the 38KHz range). To install an IR emitter, simply insert the 3.5mm plug for the emitter into the appropriate IR emitter jack. Position the emitter bulb so that it is within range and has a clear line-of-sight to the source device(s). If the emitter cord is not long enough, you can use any 3.5mm TS or TRS extension cable to extend its reach.

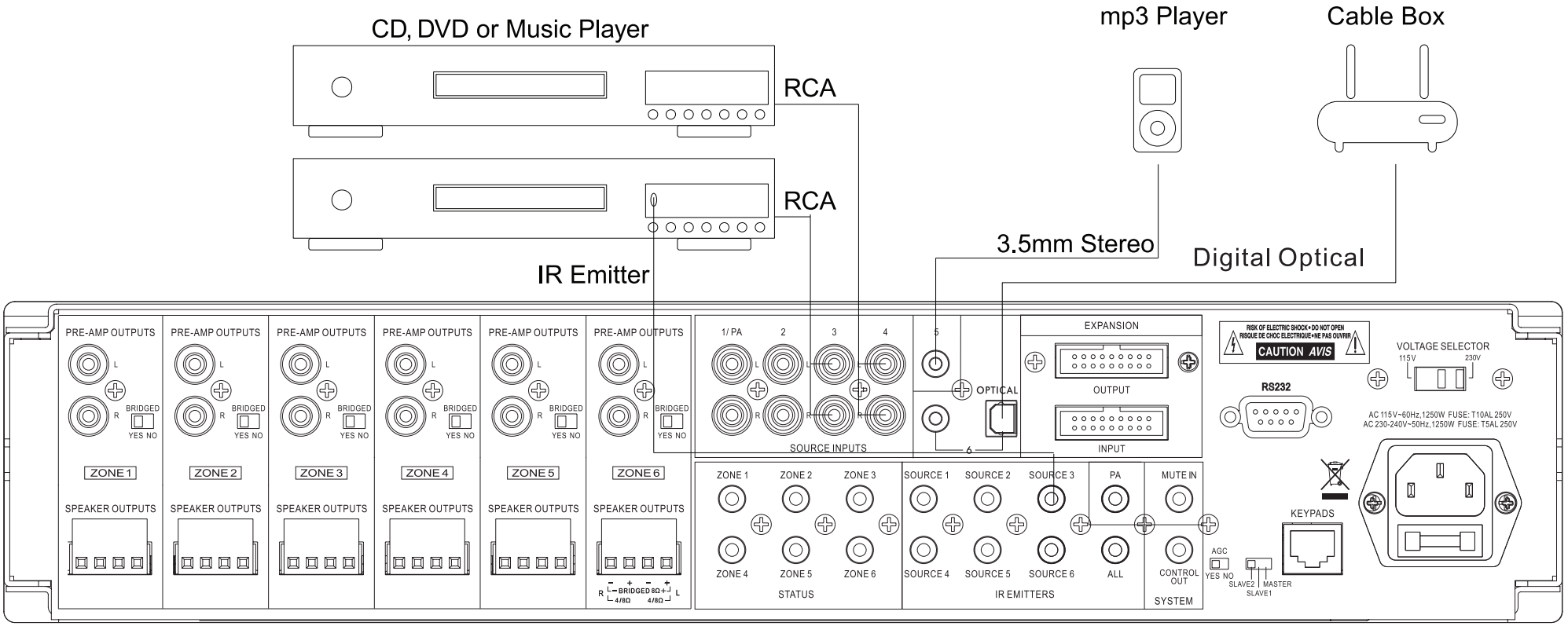

INSTALLATION: Using the Multizone Controller 12VDC Trigger Inputs and Outputs

The Multizone Controller provides 6 x 12VDC trigger outputs which correspond to the 6 x Multizone Controller zones. When a zone is powered ON by pressing and holding the SELECT button on the Multizone Controller-KP (keypad) for 3 seconds the corresponding zone sends 12VDC to the trigger output jack.

When the zone is powered OFF the routed 12VDC signal is disengaged. Triggers can be used to automatically power peripheral equipment ON/OFF with the Multizone Controller zones. The Multizone Controller also provides a master control 12VDC trigger output which sends 12VDC to the CONTROL OUT jack when any zone is powered ON. The 12VDC CONTROL OUT signal is disengaged when all zones are powered OFF.

Multizone Controller Trigger outputs:

ZONE 1-6: Zone ON 12VDC applied to output jack Zone OFF 12VDC disengaged

CONTROL: Any zone ON 12VDC applied to output jack Zone OFF 12VDC disengaged

Multizone Controller Trigger Inputs:

PA- IN- Insert 12VDC and Input 1 takes priority over all other inputs and broadcasts to all 6 zones.

MUTE - IN- Insert 12VDC and all zones will be muted. (no sound)

WIRING: 3.5mm Mono Plug (Tip + / Sleeve -)

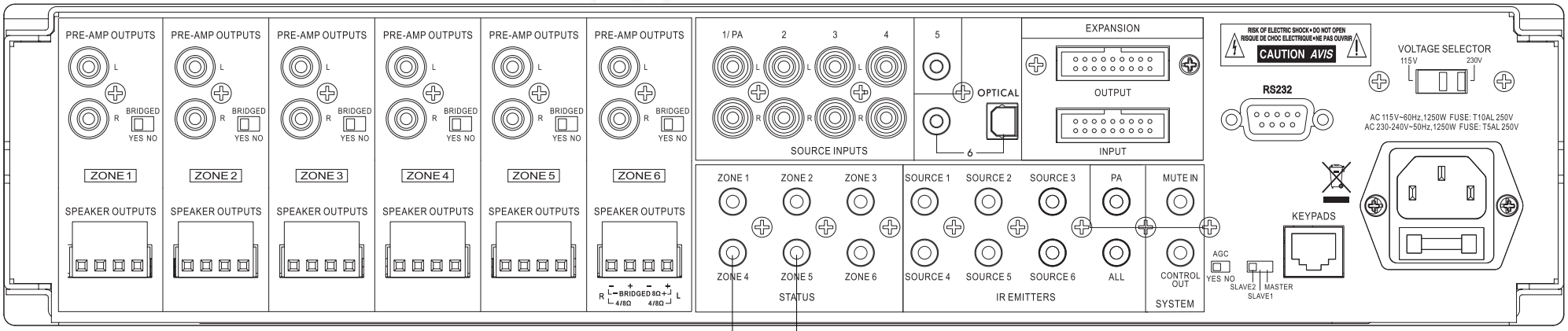

12VDC Trigger In

Motorized Projection Screen

12VDC Trigger In

External Amplifier Control

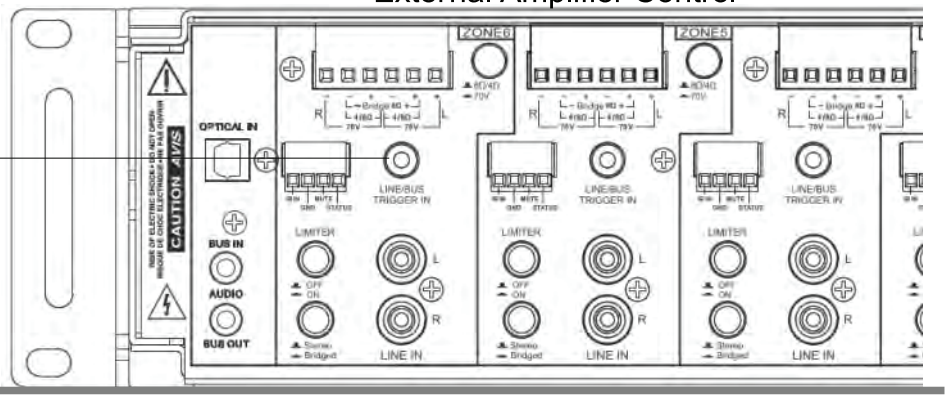

INSTALLATION: Connecting Multiple Master Controllers

If you will be using multiple MPR-6ZHMAUTs, you will first need to connect them together using the ribbon cable supplied with each unit.

1. Decide which device will be the Master device. Slide the Master/Slave switch on this unit to the Master position.
2. Plug one end of the included ribbon cable into the Expansion Output port on the back of the Master device. Plug the other end into the Expansion Input port on the back of the first slave device.
3. Slide the Master/Slave switch on the first slave device to the Slave 1 position.
4. If connecting a third device, plug one end of the included ribbon cable into the Expansion Output port on the back of the first slave device. Plug the other end into the Expansion Input port on the back of the second slave device.
5. Slide the Master/Slave switch on the second slave device to the Slave 2 position.

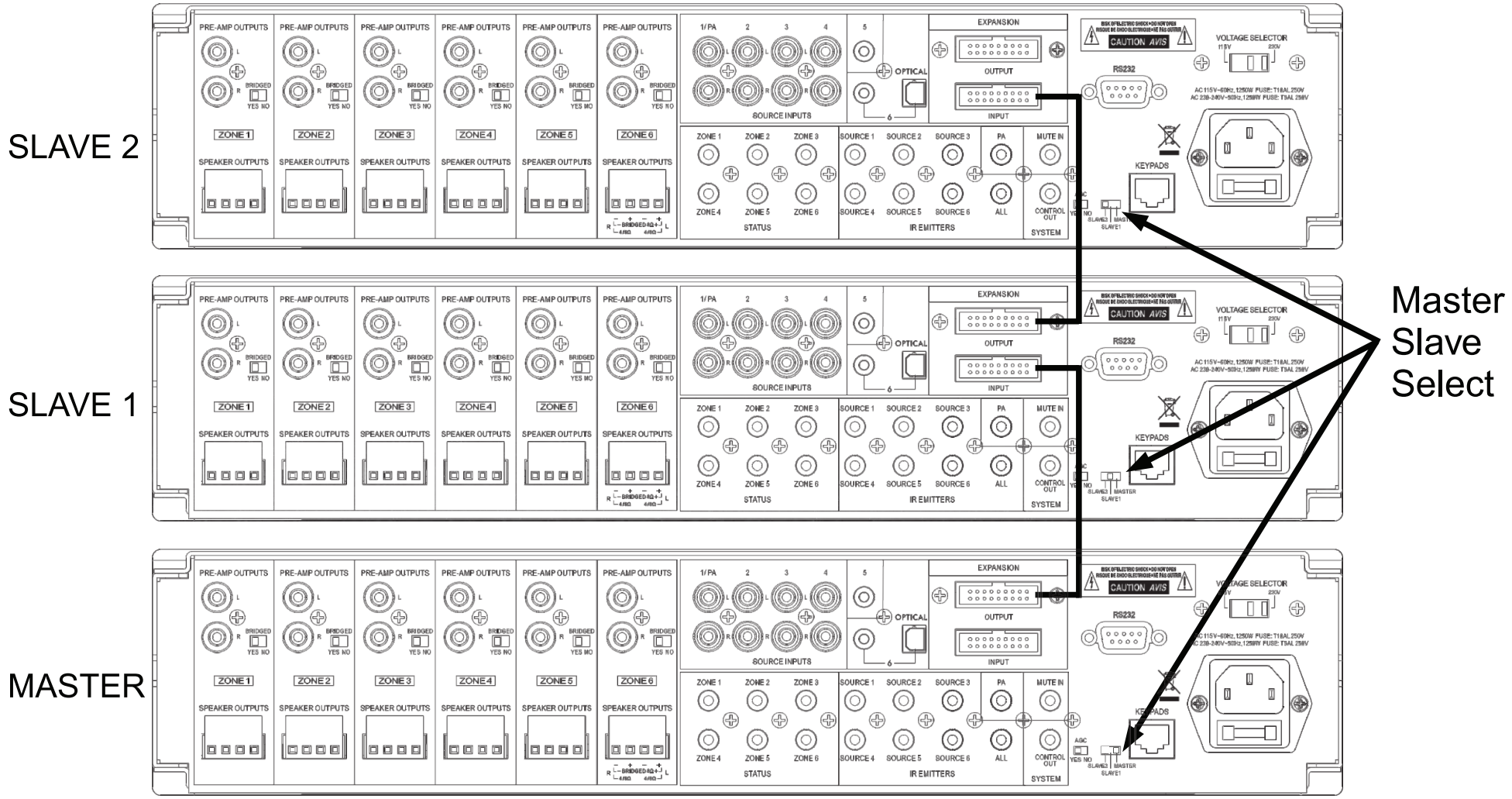

INSTALLATION: Multizone Controller RS-232 Serial Port Control

The Multizone Controller provides an RS-232 serial port connection located on the back panel of the Multizone Controller and uses a DB-9 cable connection. The Multizone Controller supports bi-directional RS-232 communication with third party automation systems. All keypad and remote control operations can be controlled via RS-232 in addition to system expansion up to 18 zones or 3 master controller units linked together using the included 18 pin expansion cable. **(Baud Rate 9600, 8, N, 1 , DB9 Connector Pin out, Tx, Rx, GND)**

Multizone Controller RS-232 CONTROL
'CR':Carriage Return (0x0D)
No case capitalization/ lowercase
Control order structure <xxPPuu'CR'
Reply control order frame >xxPPuu'CR'
xx: stands for control object code
10 :All Zone of Main unit 1.
20 :All Zone of Main unit 2.
30 :All Zone of Main unit 3.
:Zone1 of Main unit 1.
:Zone2 of Main unit 1.
:Zone3 of Main unit 1.
.....
PP: Stands for control action code.
PR:Power control
PR00:Power off PR01:Power on
MU:Mute control
MU00:Mute off MU01:Mute on
DT:Do Not Disturb control
DT00:DT control off
DT01:DT control on
VO:Volume control
VO(00-38):Volume control
TR:Treble control
TR(00-14):Treble control
BS:Bass control
BS(00-14):Bass control
BL:Balance control
BL(00-20):Balance control

CH:Source Channel control
CH(01-06):Source control
Inquiry command structure (1) ?xx'CR'
xx: stands for control object code
10 : All Zone of Main unit 1.
20 : All Zone of Main unit 2.
30 : All Zone of Main unit 3.
: Zone1 of Main unit 1
: Zone2 of Main unit 1
: Zone3 of Main unit 1
: Zone1 of Main unit 2
: Zone2 of Main unit 2
: Zone3 of Main unit 2
.....
Reply command: >xxaabbccddeeffgghhiijj'CR'
aa: PA control status
bb: Power control status ([5]:Backup Zone Power Status
(only on zone)
cc: Mute control status
dd: DT control status
ee: Volume control status
ff: Treble control status
gg: Bass control status

INSTALLATION: Multizone Controller RS-232 Serial Port Control

The Multizone Controller RS-232 Serial commands continued.

(**Baud Rate 9600, 8, N, 1 , DB9 Connector Pin out, Tx, Rx, GND)**

hh: Balance control status
ii: Source control status
jj: keypad connecting status
(00:disconnect 01:connected)
Inquiry command structure (2) ?xxPP'CR'
xx: stands for control object code
10 : All Zone of Main unit 1.
20 : All Zone of Main unit 2.
30 : All Zone of Main unit 3.
11 : Zone1 of Main unit 1
12 : Zone2 of Main unit 1
13 : Zone3 of Main unit 1
14 : Zone4 of Main unit 1
15 : Zone5 of Main unit 1
16 : Zone6 of Main unit 1

PP: Stands for control action code.
PA: PA control
PR: Power control
MU: Mute control
DT: DT control
VO: Volume control
TR: Treble control
BS: Bass control
BL: Balance control
CH: Source control
LS: keypad connecting status
Reply command: >xxPPuu'CR'

Key in 1<********'CR' change Source 1 Name display;********needs to be 8 valid ASCII codes.
Key in 2<********'CR' change Source 2 Name display
Key in 3<********'CR' change Source 3 Name display
Key in 4<********'CR' change Source 4 Name display
Key in 5<********'CR' change Source 5 Name display
Key in 6<********'CR' change Source 6 Name display

Key in M<********'CR' change the name display on keypad when turn on.
Key in <9600'CR' change RS232 speed rate to 9600
Key in <19200'CR' change RS232 speed rate to 19200
Key in <38400'CR' change RS232 speed rate to 38400
Key in <57600'CR' change RS232 speed rate to 57600
Key in <115200'CR' change RS232 speed rate to 115200
Key in <230400'CR' change RS232 speed rate to 230400
When unplugging and re-plugging the AC power cord, the baud speed rate returns to 9600.
ee: Volume control status
ff: Treble control status
gg: Bass control status
hh: Balance control status
ii: Source control status
jj: keypad connect status

INSTALLATION: Multizone Controller RS-232 Serial Port Control

The Multizone Controller RS-232 Serial commands continued.

(**Baud Rate 9600, 8, N, 1 , DB9 Connector Pin out, Tx, Rx, GND)**

(00:disconnect 01:connected)
Inquiry command structure (2) ?xxPP'CR'
xx: stands for control object code
10 : All Zone of Main unit 1.
20 : All Zone of Main unit 2.
30 : All Zone of Main unit 3.
11 : Zone1 of Main unit 1
12 : Zone2 of Main unit 1
13 : Zone3 of Main unit 1
14 : Zone4 of Main unit 1
15 : Zone5 of Main unit 1
16 : Zone6 of Main unit 1

PP: Stands for control action code.
PA: PA control
PR: Power control
MU: Mute control
DT: DT control
VO: Volume control
TR: Treble control
BS: Bass control
BL: Balance control
CH: Source control
LS: keypad connecting status
Reply command: >xxPPuu'CR'

Reply command: >xxPPuu'CR'
;********needs to be 8 ASCII codes.
Key in 1<********'CR' change Source 1 Name display
Key in 2<********'CR' change Source 2 Name display
Key in 3<********'CR' change Source 3 Name display
Key in 4<********'CR' change Source 4 Name display
Key in 5<********'CR' change Source 5 Name display
Key in 6<********'CR' change Source 6 Name display

Key in M<********'CR' change the name in the display
On the keypad when the keypad is turned on.
Key in <9600'CR' change RS232 speed rate to 9600
Key in <19200'CR' change RS232 speed rate to 19200
Key in <38400'CR' change RS232 speed rate to 38400
Key in <57600'CR' change RS232 speed rate to 57600
Key in <115200'CR' change RS232 speed rate to 115200
Key in <230400'CR' change RS232 speed rate to 230400
When unplugging and re-plugging the AC power cord, the
Baud speed rate will return to 9600.

RMS Power @ 8 ohms	25 watts x 12
RMS Power @ 4 ohms	50 watts x 12
RMS Power @ 8 ohms Bridge Mode	100 watts x 6
S/N Ratio	>85dB A Weighted
THD	<0.1%
Frequency Response	20Hz - 20kHz
Input Impedance	>47 K Ohms
Input Sensitivity	250mv
Amplifier Protection	Overload, Short Circuit & Thermal
Trigger Systems ON Voltage	DC + 12V
Trigger External Mute Voltage	DC + 12V
Infrared Frequency	38kHz
Input Connectors	3.5mm stereo, RCA, SPDIF
Output Connectors	Terminal Block, 3.5mm mono, RCA PRE-AMP
Power Supply (switchable)	AC115V/60Hz, 230V/50Hz
Dimensions mm	430 W x 89 H x 416 D
Weight	11kg
Warranty	1 Year